Diritti riservati All rights reserved

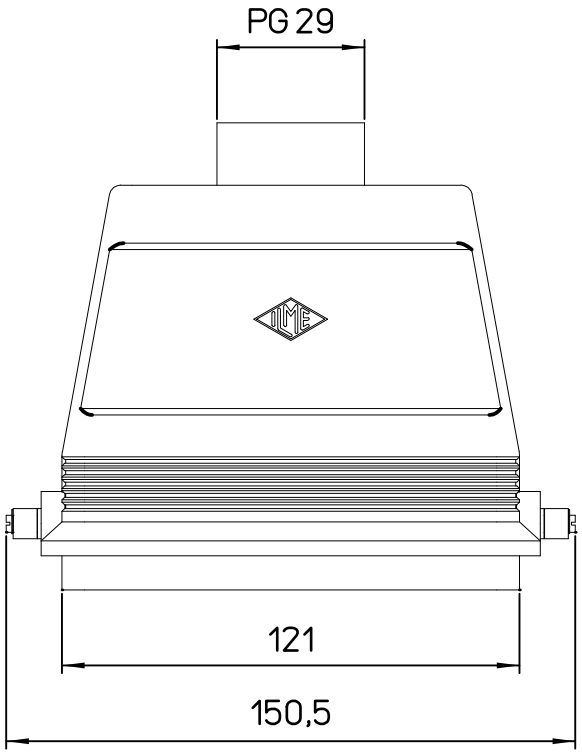

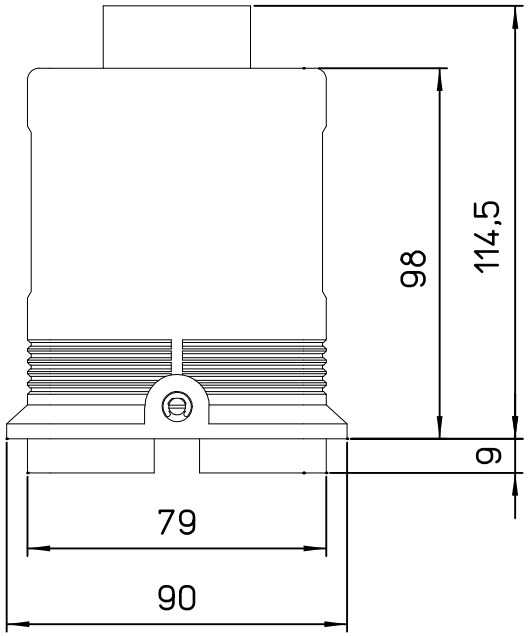

dimensions in mm	CHV 48 L29	Scale
Date 14/12/06	hood top entry PG29	1:2
Sign.		